Journal of Physics:
Conference Series

PURPOSE-LED PUBLISHING™

PAPER • **OPEN ACCESS**

Simulating of Microbial Growth Scale Up in a Stirred Tank Bioreactor for Aerobic Processes using Computational Fluid Dynamics

To cite this article: S Hernandez *et al* 2020 *J. Phys.: Conf. Ser.* **1655** 012109

View the article online for updates and enhancements.

You may also like

- The effects of pre-processing sanitation and modified atmosphere packaging on microbial growth in bulk packs of Atlantic salmon (*Salmo salar*) fillets
Fera R Dewi, Shane M Powell and Roger A Stanley
- The difference in antioxidant capacity and tannin level in the production of parijoto fruit extract based dodol (sweet toffeelike sugar palm-based confection) using 4 different types of solvent
M Ansori, Wahyuningsih, S Fathonah et al.
- Changes on microbial growth during *Mlanding tempeh* (*Leucaena leucocephala*) over fermentation
A Nursiwi, B I Dwikiputra, D Ishartani et al.



This content was downloaded from IP address 181.131.180.172 on 19/03/2025 at 19:47

Simulating of Microbial Growth Scale Up in a Stirred Tank Bioreactor for Aerobic Processes using Computational Fluid Dynamics

S Hernandez[1], L Niño[2] and G Gelves[1]

[1]. Universidad Francisco de Paula Santander. Cúcuta, Colombia
[2]. Universidad de Antioquia. Medellín Colombia.

germanricardogz@ufps.edu.co

Abstract. In this paper, the effects of some empirical scale up criteria (Reynold´s number and Impeller power per bioreactor volume) on gas-liquid mass transfer and microbial growth rates are analyzed using computational fluid dynamics simulations in a stirred tank bioreactor. The effects of turbulence, fluid flow and bubbles dynamics were simulated by using a two equation turbulence model, a multiple reference frame and a population balance, respectively. The impeller power per bioreactor volume scale up criterion showed better microbial growth rates than Reynold´s number scale up criterion. However, high cellular damage due to turbulence in animal cell culturing are still challenges in large scale up bioreactor prototyping.

1. Introduction

Considering a scale up strategy, there are some problems associated with hydrodynamics and bioreactor mixing that consequently reduce the bioprocess productivity based on small laboratory scales [1]. Loss of complete mixing with the increase of the bioreactor volume, generates gradients that lead to a distance from the optimal operating parameters found in laboratory set up. In addition, heterogeneous environments in multiphase fluids are caused by poor mixing generated by the adoption of empirical methods as scale strategies. Since these later are based on ideal approximations to maintain a constant operating parameter in both scales underestimating hydrodynamics and mass transport phenomena involve in the scale up bioprocess [2-3]. Therefore, there is still a scarce knowledge regarding studies focused on scale up studies considering computational fluid dynamics (CFD) predictions of kinetic effects based on hydrodynamics developed by a characteristic stirring system of a bioreactor. For this reason, the requirement of building and operating costly and inefficient prototypes can be avoided by predicting problems related to bioprocess scale up using CFD [4-5]. Therefore, the above would improve the advantage of savings in experimentation time and investment from a biotechnological industry since computational tools can potentiate an optimization mixing process. Considering results found in this research, computational modelling is considered a promising tool, especially useful for scale up and optimization studies focused on kinetic parameter studies in cell cultures commonly characterized by oxygen transfer problems.

2. Methodology

A bioreactor with an operating volume of 0.3 m^3 was used stirred by three Rushton turbines with a diameter of 0.2 m for simulations and experiments. Aeration system is composed using and annular sparger with a 0.207 m diameter that supplies air to the animal cell culture.

Content from this work may be used under the terms of the Creative Commons Attribution 3.0 licence. Any further distribution of this work must maintain attribution to the author(s) and the title of the work, journal citation and DOI.
Published under licence by IOP Publishing Ltd

The operating conditions were calculated based on empirical criteria commonly used in the cultivation of microorganisms such as Re (Reynold´s number) and P/V (Impeller power to bioreactor volume).

A multiphase model (gas-liquid-cells) coupled to population balance equations (bubbles) [3-9] was used in order to simulate hydrodynamics using Ansys Fluent 13.0 software. The finite volume method [6] was used for processing the Navier-Stokes equations into algebraic expressions and simulations were solved numerically. In the same way, a kinetic model was proposed to couple cell growth and gas-liquid hydrodynamics. The model is described in equation (1):

$$\frac{\partial}{\partial t}(\rho_G n_i) + \nabla \cdot (\rho_G \vec{U}_G n_i) = \rho_G \left(\Gamma_{B_{i_C}} - \Gamma_{D_{i_C}} + \Gamma_{B_{i_B}} - \Gamma_{D_{i_B}}\right) \quad (1)$$

Where n_i is the bubble numbers of classes i, $\Gamma_{B_{i_C}}$ and $\Gamma_{B_{i_B}}$ are the birth rates due to coalescence and breakage, respectively, $\Gamma_{D_{i_C}}$ and $\Gamma_{D_{i_B}}$ are the death rates. Cellular dispersion due to hydrodynamic forces are modelled in the bioreactor using equation (2):

$$\frac{\partial}{\partial t}(\rho_x \vec{U}_x) + \nabla \cdot (\alpha_x X \vec{U}_x \vec{U}_x) = X\nabla p + 2X\rho_x \vec{N} \times \vec{U}_x + X\rho_x \vec{N} \times (\vec{N} \times \vec{r}) + X\rho_x \vec{g} \quad (2)$$

Where ρ_x is the biomass density $\vec{U}_x$ is the biomass velocity, α_x the biomass fraction, X the biomass concentration, ∇p are the pressure gradients, $\vec{N}$ angular velocity, $\vec{r}$ is the radial position and $\vec{g}$ the gravity. The kinetic models are fully coupled to the hydrodynamics models. The impact on dissolved oxygen gradients (DO) are calculated from equation (3):

$$\frac{\partial \rho DO}{\partial t} + \nabla \cdot (\rho \vec{U} DO) = \nabla \cdot \left(\frac{\mu_L + \mu_t}{\sigma_S} \nabla DO\right) + K_l a(DO^* - DO) - \rho Q_{DO} \quad (3)$$

Here ρ is the liquid phase culture media density; $\vec{U}$ liquid phase velocity; μ_L and μ_t mean for the molecular and turbulent viscosity; $K_l a$ is the mass transfer coefficient calculated from CFD, DO^*s the oxygen solubility; Q_{DO} is the volumetric oxygen consumption rate. Dissolved oxygen mass transfer coefficient is estimated as the product of the liquid mass transfer coefficient and bubble interfacial area. Based on the Higbie´s penetration theory, $K_l a_{DO}$ is given using equation (4) [5]:

$$K_l a_{DO} = \rho \frac{2}{\sqrt{\pi}} \sqrt{D} \left[\frac{\varepsilon_L \rho_L}{\mu_L}\right]^{0.25} \sum_i \frac{6\alpha_i}{d_i} \quad (4)$$

Where D is the diffusion coefficient [5-7]. The glucose concentration (S) is calculated from equation (5):

$$\frac{\partial \rho S}{\partial t} + \nabla \cdot (\rho \vec{U} S) = \nabla \cdot \left(\frac{\mu_L + \mu_t}{\sigma_S} \nabla S\right) - \rho Q_S \quad (5)$$

Where Q_S is the overall glucose consumption rate. The overall kinetic rates for dissolved oxygen consumption Q_{DO}, glucose consumption Q_S and biomass growth Q_X are modeled using equations (6-8):

$$Q_{DO} = \frac{1}{YxDO} \mu X \quad (6)$$

$$Q_S = \frac{1}{Yxs} \mu X \quad (7)$$

$$Q_X = \mu X \quad (8)$$

Where specific biomass growth μ rate is calculated from equation (9):

$$\mu = \mu_{max} \frac{S}{k_s+S} \frac{DO}{k_{DO}+DO} \quad (9)$$

3. Results and Discussions

Figures 1-5 show CFD results regarding scale up criteria analyzed. Based on results heterogeneities were found in microbial growth using Re and P/V scale up criteria. Therefore, bubble diameter breakup and coalescence phenomena (see Figure 1) are influenced by flow dynamics. That is why smaller bubbles sizes were determined using the P/V criterion compared to Re. Considering the above, Re scale up criterion negatively influences oxygen transfer coefficient (Figure 2) from culture medium to microbial reaction rates since bubbles of smaller size have a higher interfacial area for oxygen to be transferred to the liquid media.

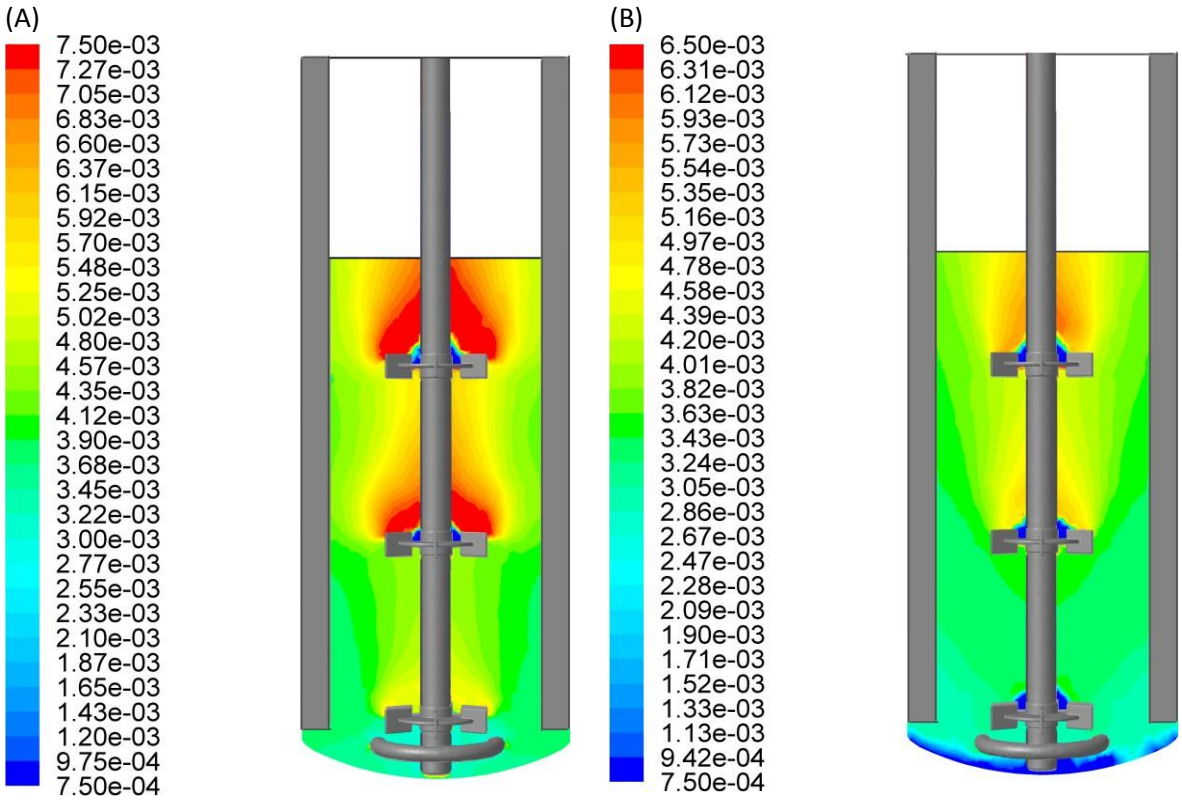

Figure 1. Bubble size (m) simulated from CFD for Re (A) and P/V (B) scale up criteria.

As shown in Figure 2, the impact of the developed bubble size is significant related to the used scale up strategy. The above, argued in the low $K_l a_{DO}$ values found using the Re criterion. This could also generate mixing problems that can influence the final quality of a metabolite. A similar scenario is presented in the simulation of cell dispersion finding lower heterogeneities during the scale up operated with the P/V criterion (see Figure 3).

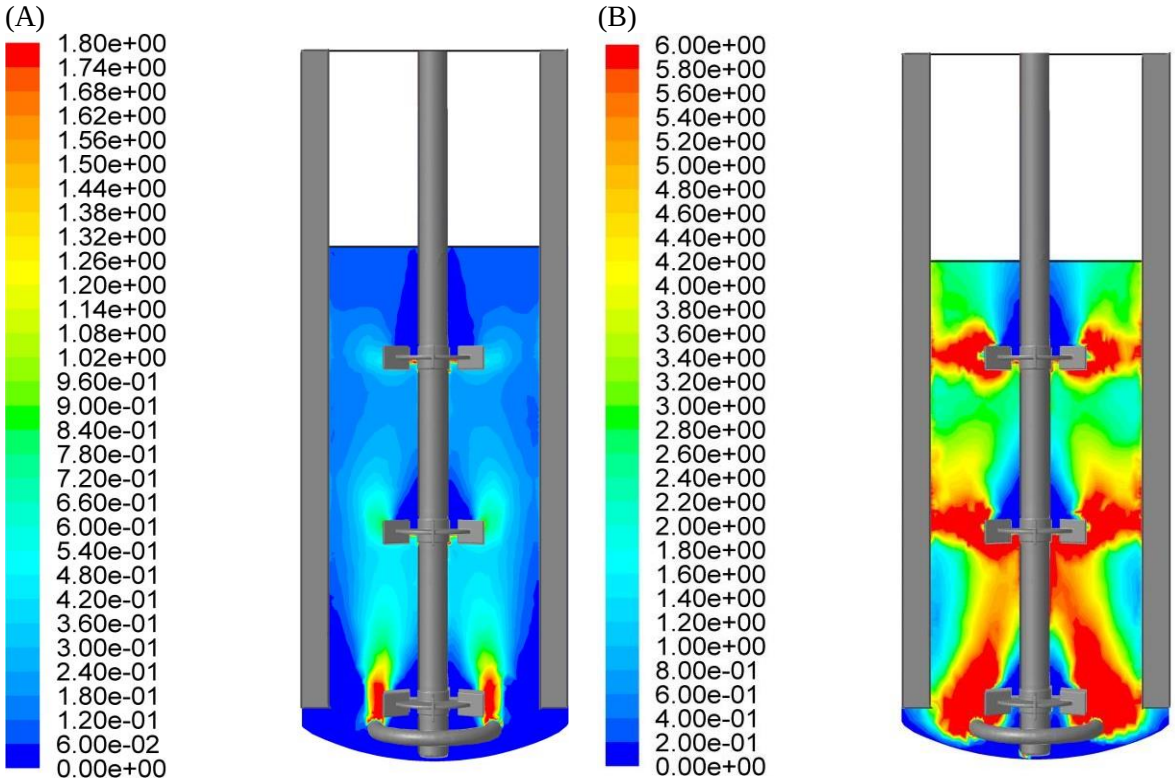

Figure 2. Mass transfer coefficient $K_l a_{DO}$ from CFD (h^{-1}) for Re (A) and P/V (B) scale up criteria.

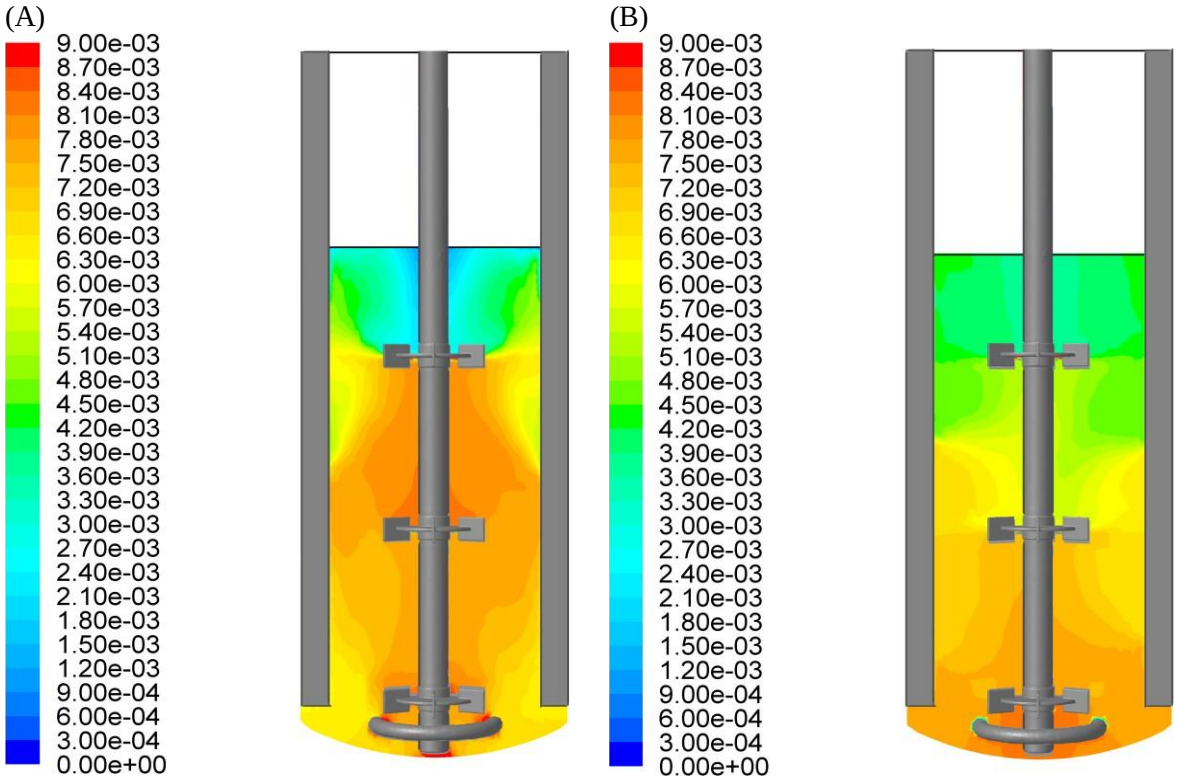

Figure 3. Biomass cell dispersion (-) for Re (A) and P/V (B) scale up criteria.

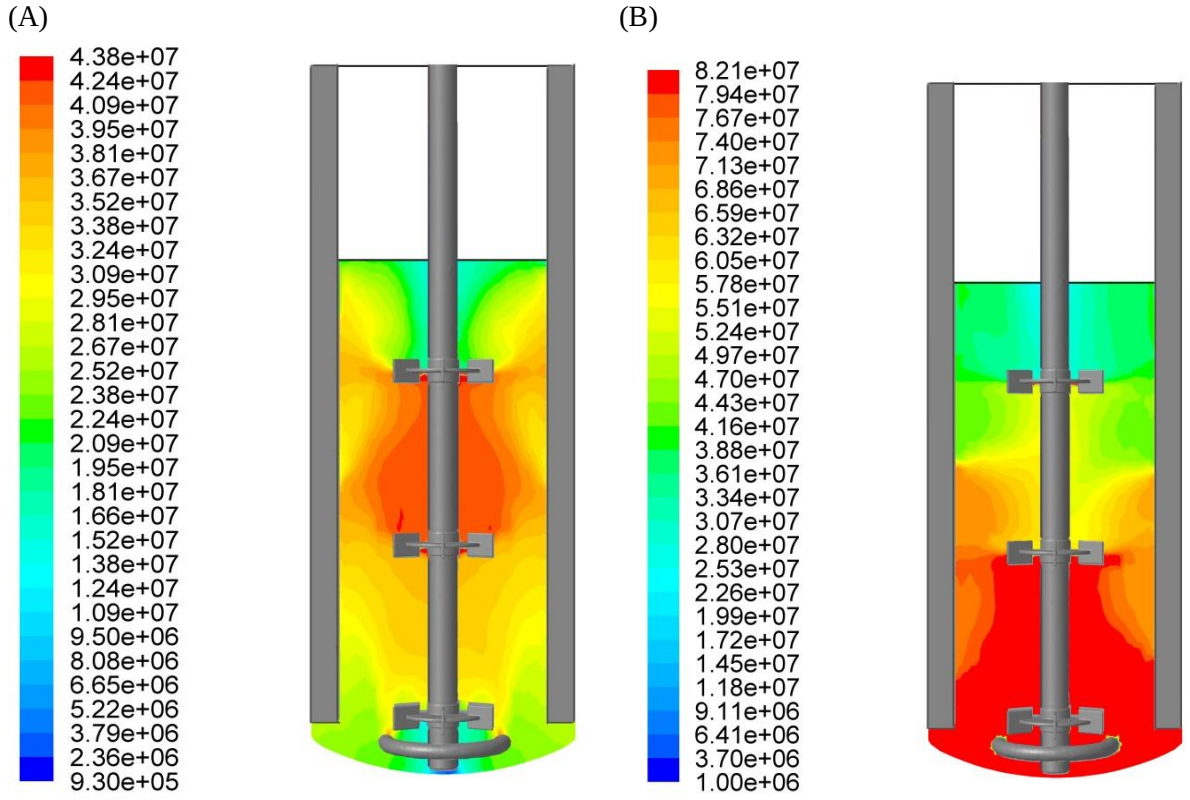

Figure 4. Microbial growth Q_x velocity (cell/m^3s) for Re (A) and P/V (B) scale up criteria.

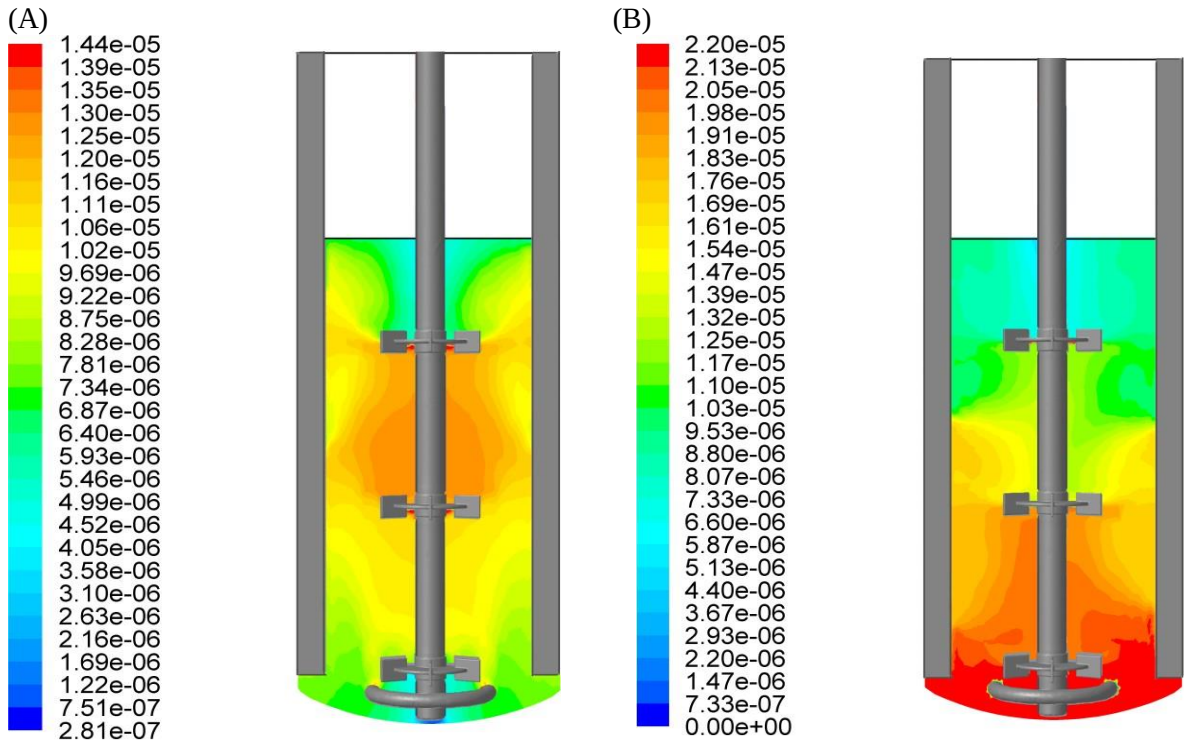

Figure 5. Oxygen uptake (Q_{DO}) rate (kg/m^3s) for Re (A) and P/V (B) scale up criteria.

Considerable heterogeneities can be observed in Figures 4-5 which show the profiles of microbial velocities calculated by CFD. According to observed results, the maximum reaction rates occur in the areas of the bioreactor where oxygen transfer is highest, especially in the P/V criterion. This has also been reported by [2]. Besides, lowest growth rates are simulated for the upper region, centered above the top Rushton turbine in the falling flow. Obviously, oxygen transfer conditions (see Figure 5) are such poor that oxygen levels only reach concentrations half of the ones at the bottom of the bioreactor. Figure 4 depicts that reduced biomass formation occurs in these oxygen limited zones. In case of a growth-coupled product formation biomass specific product formation rates would reduce likewise.

Concentration gradients and microbial velocities have a very clear structure, defined by hydrodynamics, bubble dynamics and the relationship between the different species present in the bioreactor. The later interact very clearly with these areas, thus in this way gaseous liquid mass transfer dominates all reaction rates. The information obtained about the heterogeneities found by CFD simulations in animal cell culture can be used to optimize the design of bioprocesses. In this way, the coupling between kinetic models and hydrodynamics in large-scale bioreactors can be useful for geometry design and scale up studies.

4. Conclusions

The CFD model applied in this research simulates the kinetic effects that are generated in a scale up process and predicts hydrodynamic trends affecting a biological scale up. Based on result found here P/V scale up criterion showed better microbial reaction rates than the Re criterion, however possible microbial damage generated by turbulence in animal cell culturing is still a challenge in large-scale prototypes since high stirring speeds are required to reach a mixing homogenization.

References

[1] Niño L, Gelves R, Ali H, Solsvik J and Jakobsen H 2019 Applicability of a modified breakage and coalescence model based on the complete turbulence spectrum concept for CFD simulation of gas-liquid mass transfer in a stirred tank reactor *Chemical Engineering Science* **211** 1

[2] Gelves R, Benavides A and Quintero J C F D 2013 prediction of hydrodynamic behavior in the scale-up of a stirred tank reactor for aerobic processes *Ingeniare Revista Chilena de ingeniería* **21** 347

[3] Gelves G 2020 Simulating hydrodynamics in a Rushton turbine at different stirring velocities applied to non-Newtonian fluids *Journal of Physics: Conference Series* **1587** 012012

[4] Rutherford K, Lee, Mahmoudi K and Yianneskis M 1996 Hydrodynamic characteristics of dual Rushton impeller stirred vessels *American Intitute of Chemical Engineering* **42** 332

[5] Kerdouss F, Bannari A, Proulx P, Bannari R, Skrga M and Labrecque Y 2012 Two-phase mass transfer coefficient prediction in a stirred vessel with a CFD model *Computers and Chemical Engineering* **32** 1943

[6] Luo J, Issaand R and Gosman A 1994 Prediction of impeller induced flow in mixing vessels using multiple frames of reference *Chemical Engineering Symposium Series. Institution of Chemical Engineers* **136** 549

[7] Micale G, Brucato and A Grisafi F 1999 Prediction of flow fields in a dual-impeller stirred tank *American Intitute of Chemical Engineering* **45(3)** 445

[8] Tabor A, Gosman G and Issa R 1996 Numerical simulation of the flow in a mixing vessel stirred by a Rushton Turbine *American Intitute of Chemical Engineering Symposium Series* **140** 25

[9] Solsvik J and Jakobsen H 2016 A review of the statistical turbulence theory required extending the population balance closure models to the entire spectrum of turbulence *American Intitute of Chemical Engineering* **62(5)** 1795